LUCIDE
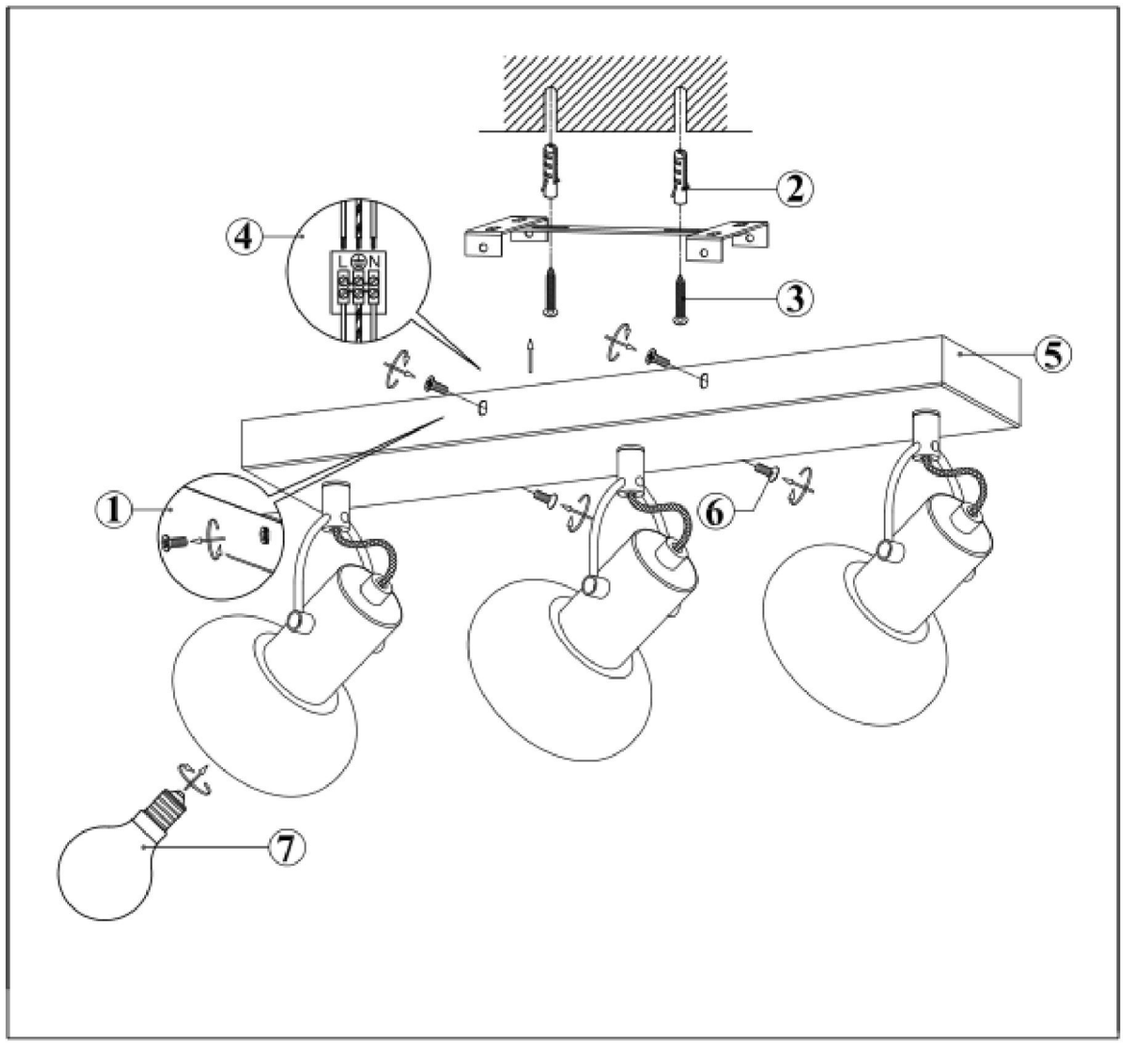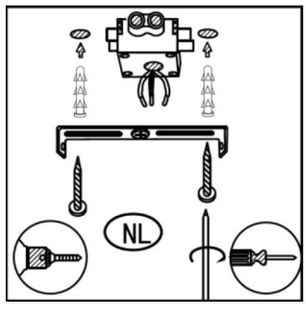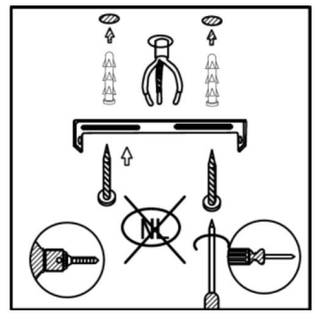
INSTALLATION DRAWING SPECIFICATIONS